# DIMENSIONAL DRAWING:4303L

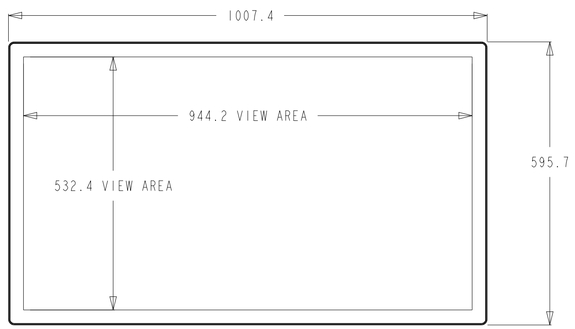


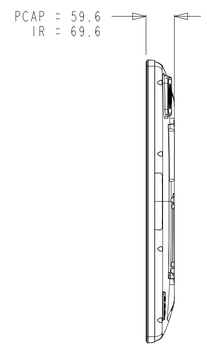


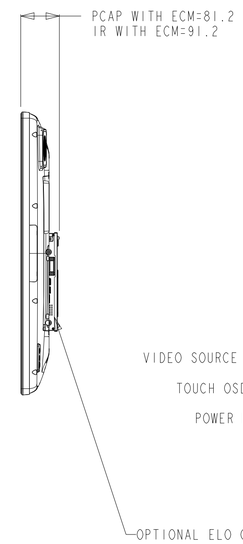


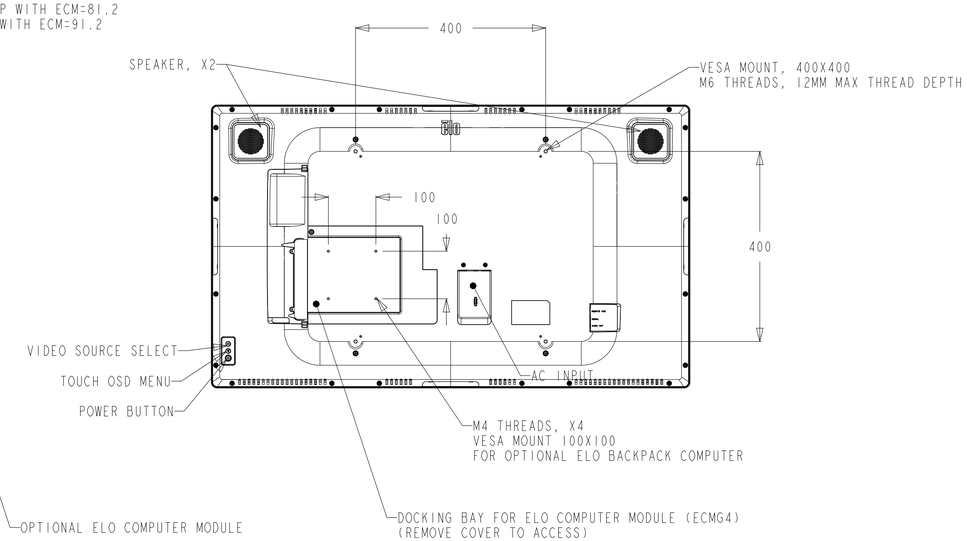


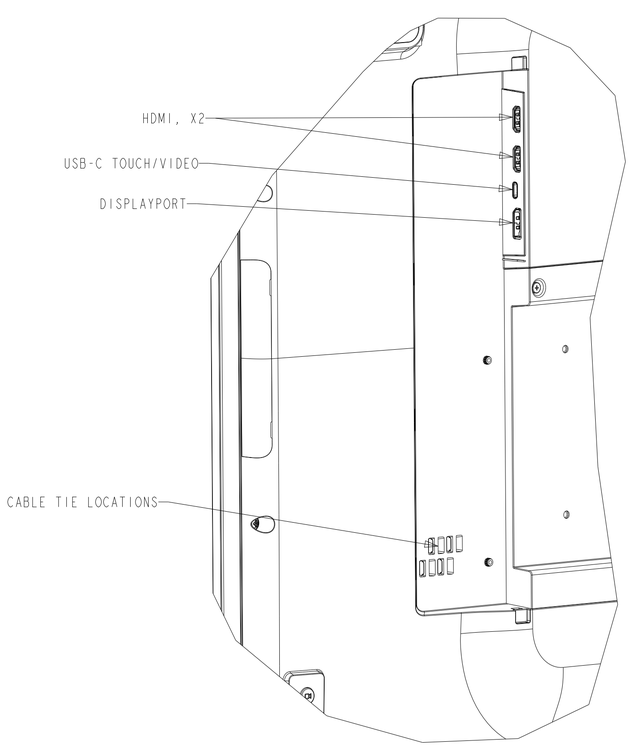


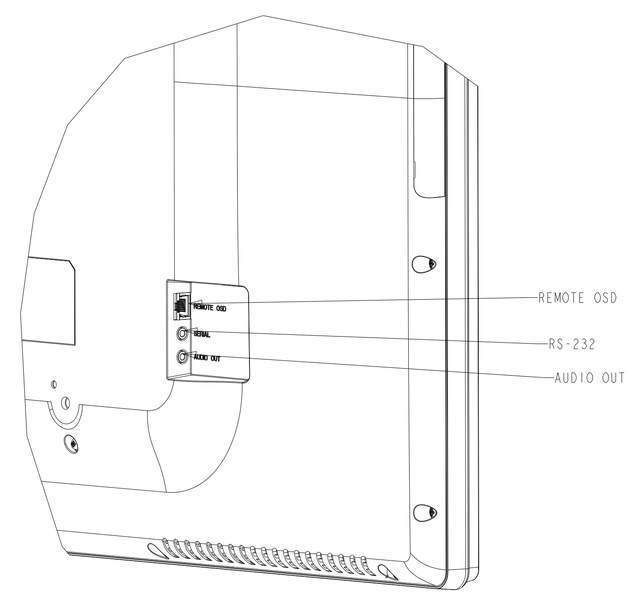


DIMENSIONS ARE IN MILLIMETERS

SHEET 1 OF 4

elo

MS602352
DATE:11/03/2021
REV: B