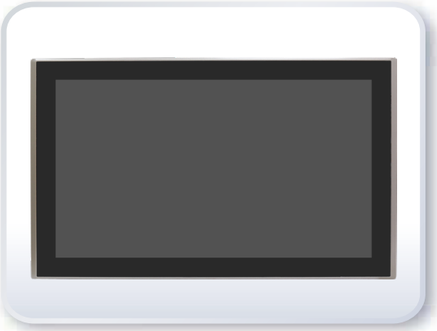

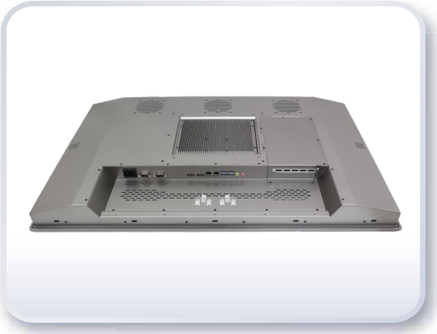

Features

- 32” Industrial Compact Size Panel PC
- Intel 6th Gen. Core i3(standard) / i5(option) CPU built-in
- 1 x 260Pin SO-DIMM DDR4 up to 16GB 2133MHz
- Flat Front Panel Touch Screen
- Fanless Design
- AC 90~264V Wide-Ranging Power Input
- Optional Projected Capacitive Touch Screen Support 7H Anti-Scratch Surface

Specifications

System	
CPU	Onboard Intel 6th Gen. Core i3/i5(Option) CPU
System Chipset	SoC
Memory	1 x 260Pin SO-DIMM DDR4 up to 16GB 2133MHz

I/O Port	
USB	2 x USB 3.0 type A
Serial / Parallel	1 x DB-9 RS-232/422/485, COM1 (Default RS-232) 1 x RS-232 DB-9, COM2
Audio	1 x Audio Line Out
LAN	2 x GbE LAN RJ-45
Power	1 x 3-pin DC Power input terminal 1 x 2-Pin Power Switch
Option	2 x RS-232 DB-9 + 1 x Mini-PCIe slot via TB-528C2ME1 2 x CAN bus via TB-528CAN2 2 x USB 2.0 type A + 1 x Mini-PCIe slot + 1xRS-232 DB-9 via TB-528C1U2P1 2 x USB 2.0 type A Via TB-528U2 UPS battery 21W/10.8V/1.95Ah(3S1P)

Storage Space	
HDD	1 x 2.5" SATA HDD bay for SATA3 HDD (Easy Accessible)

Expansion	
Expansion Slot	1 x Internal Mini-PCIe slot full size

Dispalay	
Display Type	32” TFT LCD
Max. Resolution	1920 x 1080
Max. Color	16.7M
Luminance (cd/m^2)	500
View Angle	178(H) / 178(V)
Contrast	3000:1
Backlight Lifetime	50,000 hrs
Option	Optical bonding

Projected Capacitive Touch	
Interface	USB
Light Transmission(%)	Over 90%

Power	
Power Input	AC 90~264V
Power Consumption	ARCHMI-932AP: 80W

Dimensions

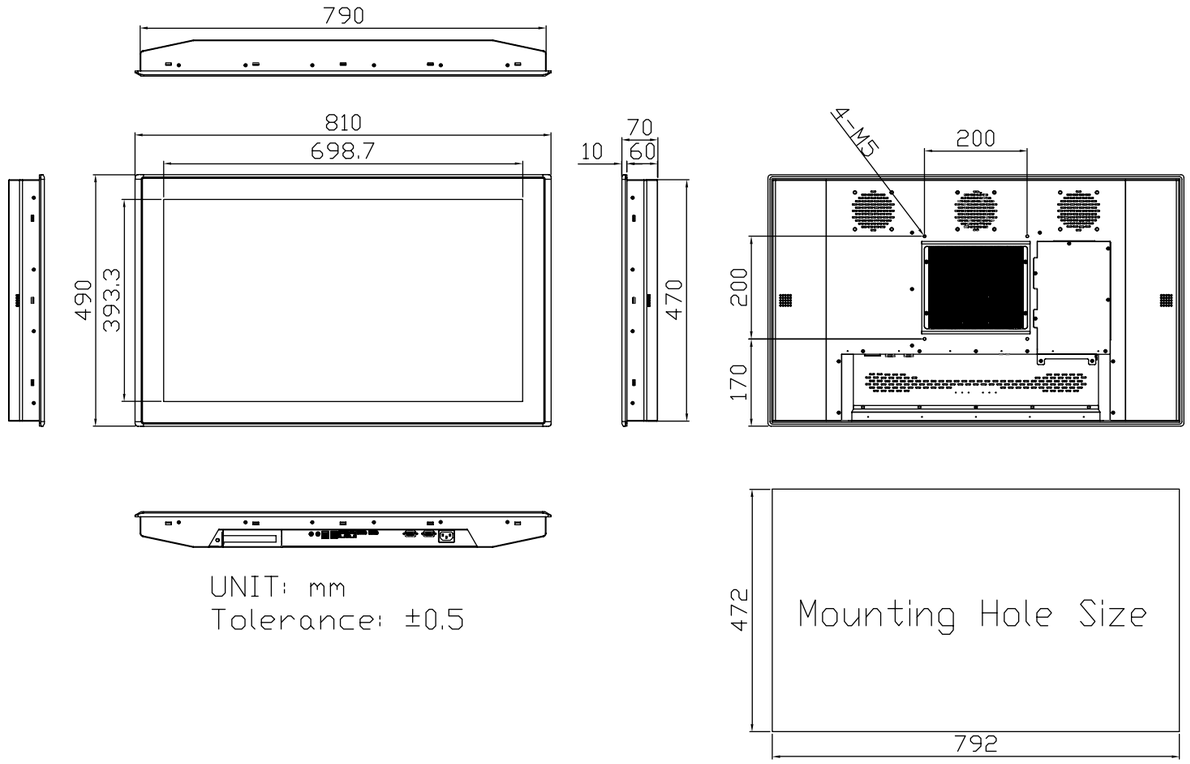

Mechanical	
Front Bezel	Flat Bezel design
Front Bezel Metal	Aluminum / Panel Mounting
Rear Panel Metal	Aluminum / VESA 200 x 200
Dimensions (WxHxD)	810mm x 490mm x 70mm
IP Rating	Front Panel IP66
Net Weight	17.44 kg

Environmental	
Operating Temperature	0~50˚C
Storage Temperature	-20~60˚C
Storage Humidity	10 to 90%@ 40˚C, non-condensing
Certificate	CE / FCC, Class A

Operating System Support
Windows 7 64 bit / Windows 8 64 bit / Windows 10 IoT 64 bit

Ordering Information	
ARCHMI-932AP-01	32” FHD Fanless HMI barebone with Intel Core i3 CPU, 4GB DDR4 RAM, Projected Capacitive touch screen, AC 90~264V input with adaprte , Aluminum chassis

V 1.6

All specifications and photos are subject to change without notice.
All specifications and photos are subject to change without notice.
HMI Controller